Independent Power Supply for (9 Volt) Digital Panel Meters CX101A

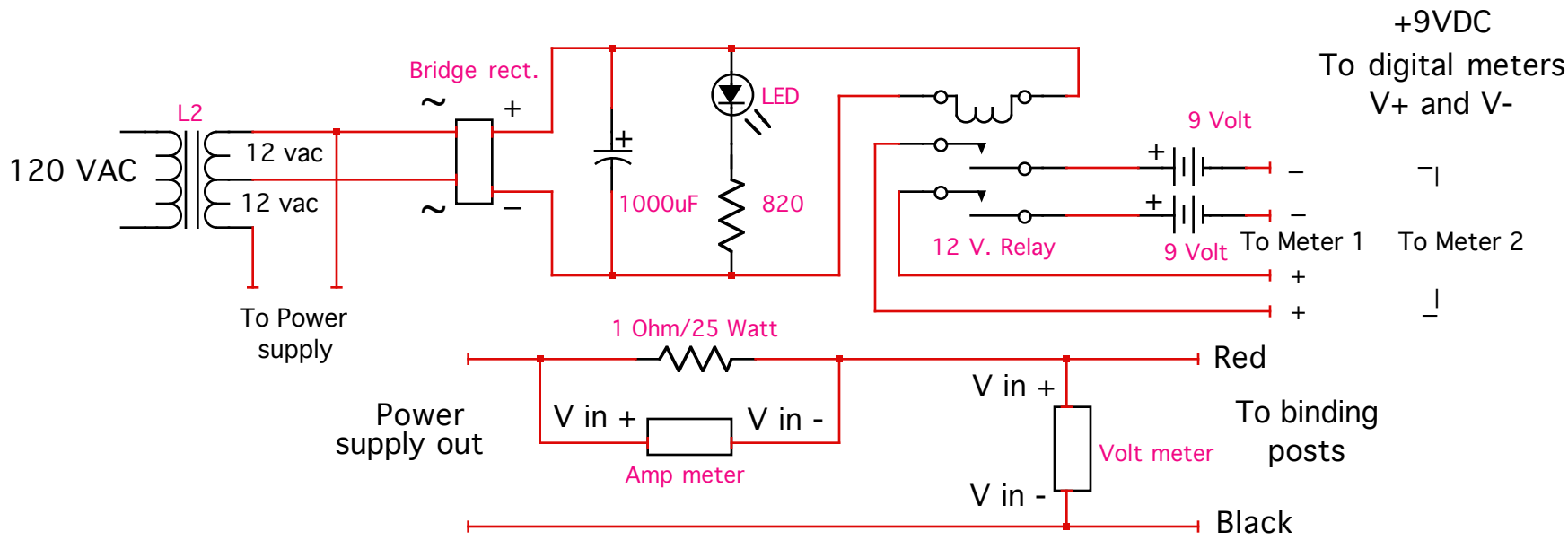

The CX101 digital panel meters will not operate from the same voltage they are measuring. They need an independent power source. Used together in this circuit they did not operate properly from the same independene power source. Therefore, I used a 9 volt battery for each meter and switched them on with a relay. The relay would not be needed if a 3PST switch is used to turn the main power supply and the 2 meter power source circuits on.

The Volt meter and the Amp meter are both CX101A digital volt meters. For volts the meter is set for 200 volt max and for the amps the meter is set for 20 volt max (across the 1 Ohm resistor).

laj 2011