Wave Generator LM566

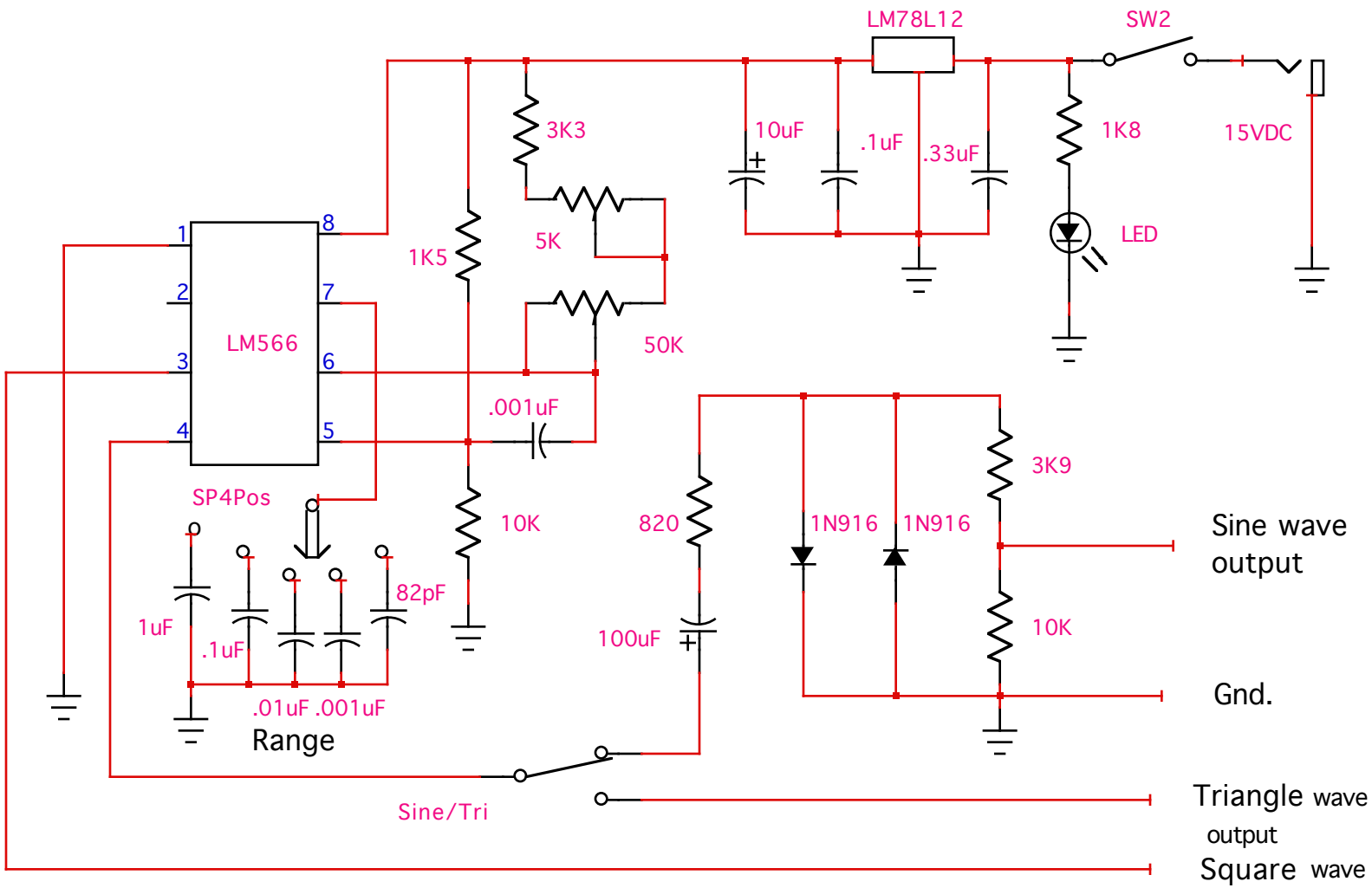

The LM566 is a voltage controlled oscillator. It will produce a square wave at pin 3 and a triangle wave at pin 4. Additional components convert the triangle wave to a sine wave. the 50K pot is frequency adjust and the 5K pot is fine adjust.

laj '13