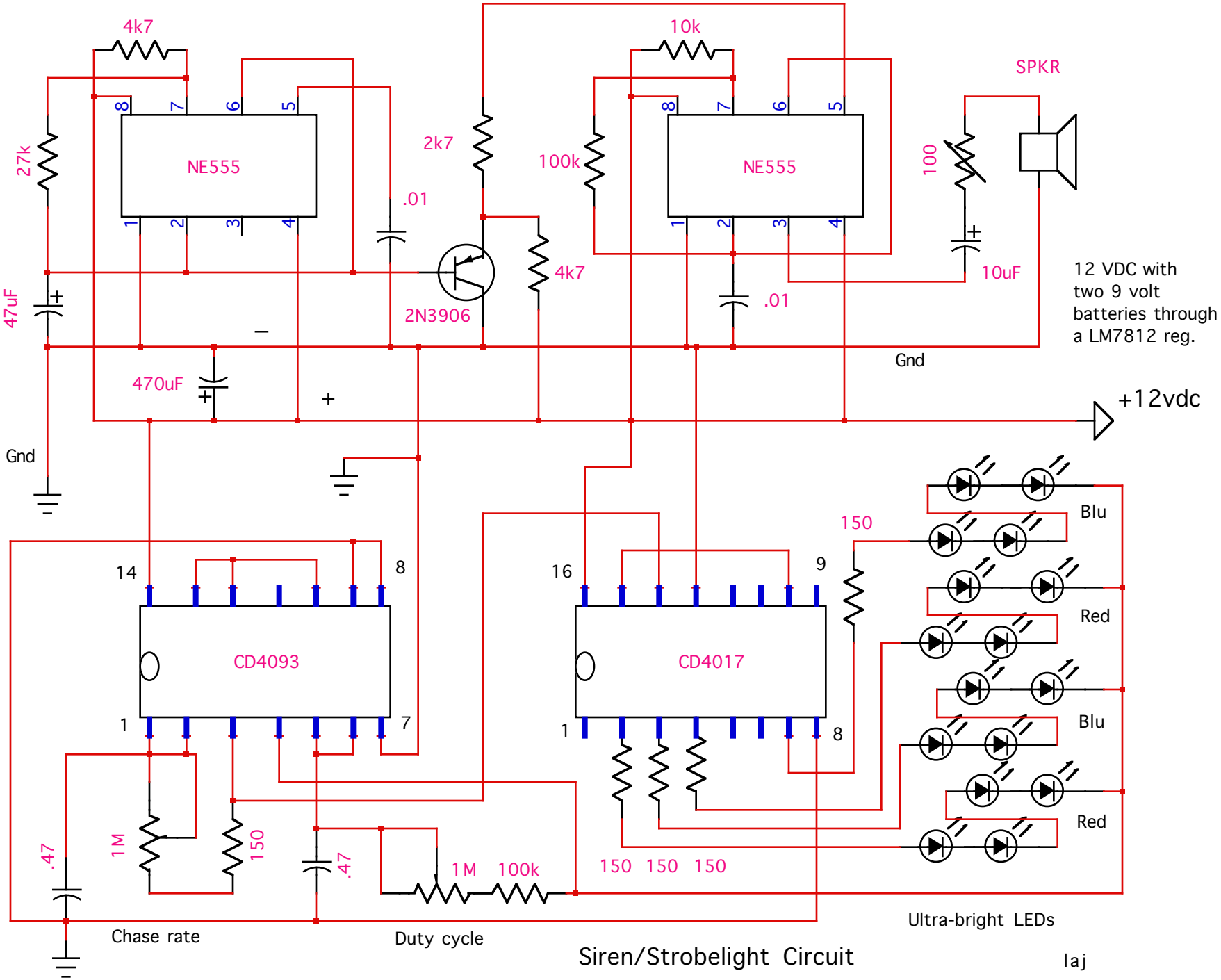
4k7
10k
SPKR
27k
NE555
2k7
100k
NE555
100
.01
4k7
10uF
47uF
2N3906
.01
12 VDC with
two 9 volt
batteries through
a LM7812 reg.
Gnd
470uF
+12vdc
Gnd
Blu
150
Red
CD4093
CD4017
Blu
Red
.47
1M
150
.47
1M
100k
150 150 150
Ultra-bright LEDs
Chase rate
Duty cycle
Siren/Strobelight Circuit
laj