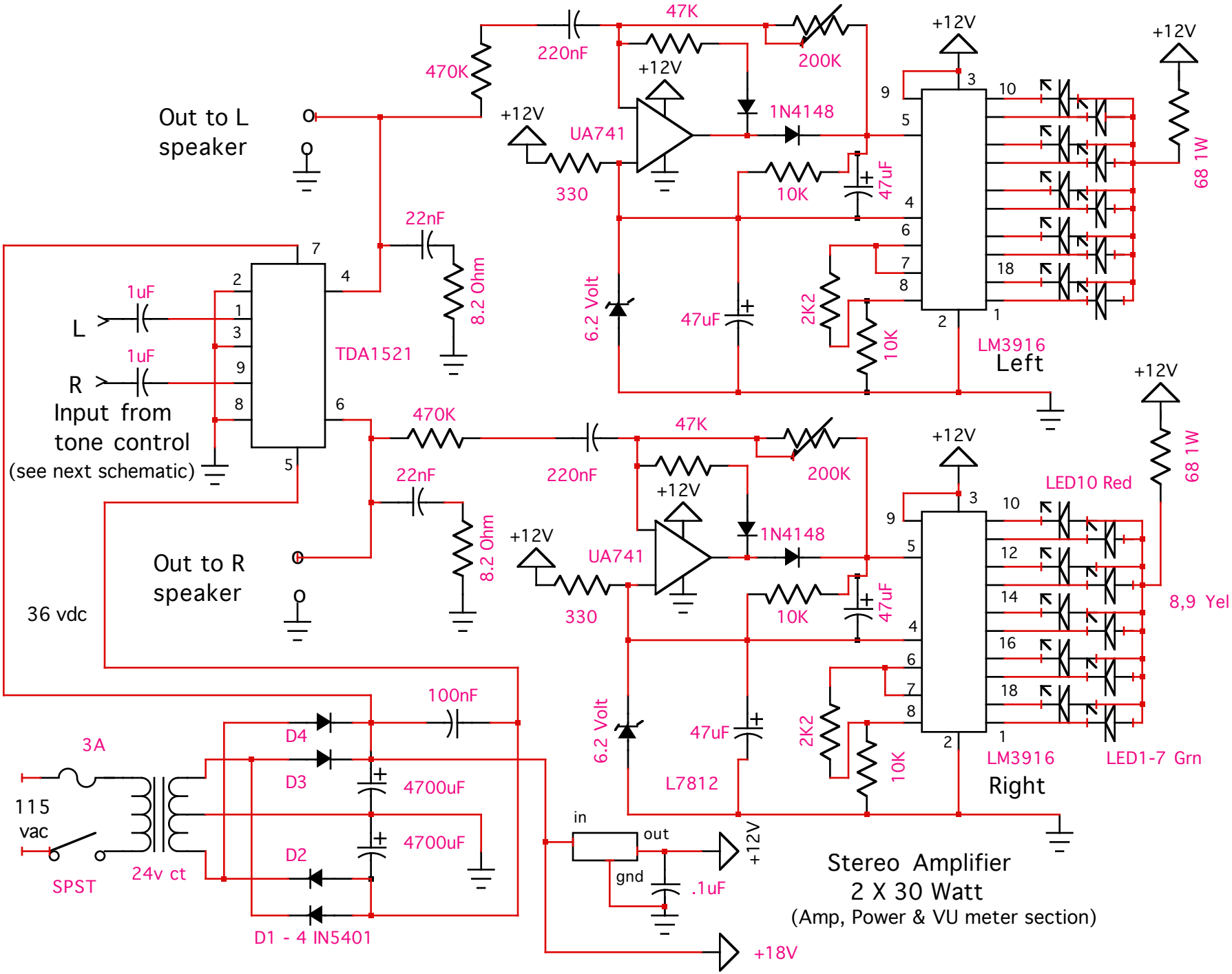
Out to L speaker
470K
220nF
47K
200K
+12V
UA741
1N4148
330
10K
47uF
22nF
8.2 Ohm
6.2 Volt
2K2
LM3916
Left
68 1W
L
R
1uF
TDA1521
Input from tone control
(see next schematic)
Out to R speaker
36 vdc
LED10 Red
8,9 Yel
LED1-7 Grn
Right
L7812
100nF
D4
D3
D2
3A
115 vac
SPST
24v ct
4700uF
D1 - 4 IN5401
in
out
gnd
.1uF
+18V
Stereo Amplifier
2 X 30 Watt
(Amp, Power & VU meter section)