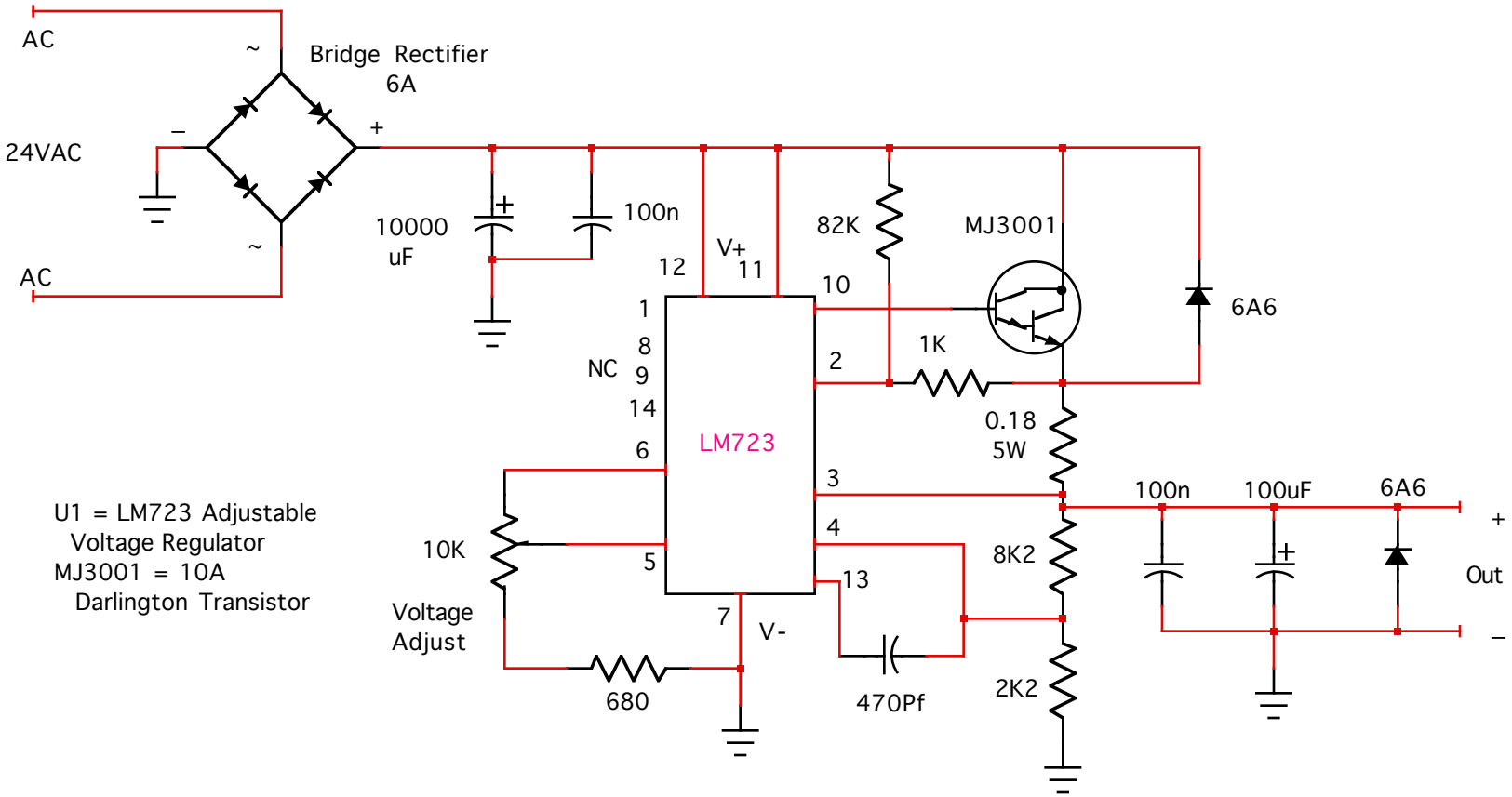
AC
~
Bridge Rectifier
6A
24VAC
–
+
AC
~
10000
uF
100n
V+
12
11
82K
MJ3001
10
1
8
NC
9
14
6
LM723
2
1K
6A6
0.18
5W
3
100n
100uF
6A6
+
Out
–
4
10K
5
8K2
13
Voltage
Adjust
7
V-
680
470Pf
2K2
U1 = LM723 Adjustable
Voltage Regulator
MJ3001 = 10A
Darlington Transistor